| Specifications | |
|---|---|
| Precision grade | JIS grade N8 (JIS B1702-1: 1998)* |
| Gear teeth | Standard full depth |
| Pressure angle | 20° |
| Material | S45C |
| Heat Treatment | — |
| Tooth hardness | (less than 194HB) |
| Surface treatment | Black oxide coating |

* The precision grade of products with a module of less than 0.8 is equivalent to the value shown in the table.

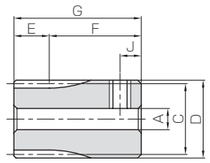


S3T

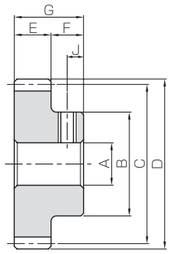


S1T

| Catalog Number | Module | No. of teeth | Shape | Bore $A_{H7}$ | Hub dia. B | Pitch dia. C | Outside dia. D | Face width E | Hub width F | Total Length G | Keyway Width × Depth |
|---|---|---|---|---|---|---|---|---|---|---|---|
| KSS0.5-15A | m0.5 | 15 | S3T | 3 | 8.5 | 7.5 | 8.5 | 5 | 11 | 16 | — |
| KSS0.5-16A | | 16 | | 3 | 9 | 8 | 9 | | | | |
| KSS0.5-18A | | 18 | | 4 | 10 | 9 | 10 | | | | |
| KSS0.5-20A<br>KSS0.5-20B | | 20 | | 3<br>4 | 11 | 10 | 11 | | | | |
| KSS0.5-21A | | 21 | | 4 | 11.5 | 10.5 | 11.5 | | | | |
| KSS0.5-22A | | 22 | | 4 | 12 | 11 | 12 | | | | |
| KSS0.5-24A<br>KSS0.5-24B | | 24 | | 4<br>5 | 13 | 12 | 13 | | | | |
| KSS0.5-25B | | 25 | | 5 | 13.5 | 12.5 | 13.5 | | | | |
| KSS0.5-27A | | 27 | | 4 | 14.5 | 13.5 | 14.5 | | | | |
| KSS0.5-28A | | 28 | S1T | 4 | 12 | 14 | 15 | | 7 | 12 | |
| KSS0.5-30A<br>KSS0.5-30B<br>KSS0.5-30C | | 30 | | 4<br>5<br>6 | 13 | 15 | 16 | | | | |
| KSS0.5-32A | | 32 | | 5 | 14 | 16 | 17 | | | | |
| KSS0.5-35A | | 35 | | 5 | 15 | 17.5 | 18.5 | | | | |
| KSS0.5-36A | | 36 | | 5 | 16 | 18 | 19 | | | | |
| KSS0.5-40A<br>KSS0.5-40B | | 40 | | 5<br>6 | 18 | 20 | 21 | | | | |
| KSS0.5-45A | | 45 | | 5 | 20 | 22.5 | 23.5 | | | | |
| KSS0.5-50A<br>KSS0.5-50B | | 50 | | 5<br>6 | 22 | 25 | 26 | | | | |
| KSS0.5-54A | | 54 | | 5 | 25 | 27 | 28 | | | | |
| KSS0.5-60A<br>KSS0.5-60B | | 60 | | 6<br>8 | 28 | 30 | 31 | | | | |
| KSS0.5-70A<br>KSS0.5-70B | | 70 | | 6<br>8 | 28 | 35 | 36 | | | | |
| KSS0.5-80A<br>KSS0.5-80B | | 80 | | 6<br>8 | 28 | 40 | 41 | | | | |
| KSS0.5-90A | | 90 | | 8 | 28 | 45 | 46 | | | | |
| KSS0.5-96A | | 96 | | 8 | 28 | 48 | 49 | | | | |
| KSS0.5-100A | | 100 | | 8 | 28 | 50 | 51 | | | | |
| KSS0.5-120A | | 120 | | 8 | 28 | 60 | 61 | | | | |

[Caution on Product Characteristics]
① The key groove used is a JIS B 1301 normal type (Js9) and a set screw is included for products with a tapped hole.
② The allowable torques shown in the table are calculated values according to the assumed usage conditions. Please see Page 24 for more details.
③ The backlash values shown in the table are the theoretical values for the backlash in the normal direction of a pair of identical gears in mesh.
④ If the bore diameter is less than φ 4, the bore tolerance class is H8. If the bore diameter is φ 5 or φ 6, and the hole length (total length) exceeds 3 times the diameter, then the class is also H8.
⑤ When using S3T and S1T set screws for fastening gears to a shaft, only use this method for applications with light load usage. For secure fastening, please use dowel pins in combination.

| Socket head screw Size | J | Allowable torque (N·m) Bending strength | Allowable torque (N·m) Surface durability | Allowable torque (kgf·m) Bending strength | Allowable torque (kgf·m) Surface durability | Backlash (mm) | Weight (kg) | Catalog Number |
|---|---|---|---|---|---|---|---|---|
| M3 | 2.5 | 0.46 | 0.022 | 0.047 | 0.0022 | 0~0.10 | 0.0056 | KSS0.5-15A |
| M3 | | 0.51 | 0.025 | 0.052 | 0.0025 | | 0.0064 | KSS0.5-16A |
| M3 | | 0.61 | 0.032 | 0.063 | 0.0033 | | 0.0076 | KSS0.5-18A |
| M3<br>M3 | | 0.72 | 0.040 | 0.073 | 0.0041 | | 0.010<br>0.0095 | KSS0.5-20A<br>KSS0.5-20B |
| M3 | | 0.77 | 0.044 | 0.079 | 0.0045 | | 0.011 | KSS0.5-21A |
| M3 | | 0.83 | 0.049 | 0.084 | 0.0050 | | 0.012 | KSS0.5-22A |
| M3<br>M4 | 2.5<br>3 | 0.93 | 0.059 | 0.095 | 0.0060 | | 0.014<br>0.013 | KSS0.5-24A<br>KSS0.5-24B |
| M4 | 3 | 0.99 | 0.064 | 0.10 | 0.0065 | | 0.014 | KSS0.5-25B |
| M3 | 2.5 | 1.10 | 0.075 | 0.11 | 0.0076 | | 0.018 | KSS0.5-27A |
| M3 | 3.5 | 1.16 | 0.081 | 0.12 | 0.0082 | | 0.011 | KSS0.5-28A |
| M3<br>M4<br>M4 | | 1.27 | 0.093 | 0.13 | 0.0095 | | 0.013<br>0.012<br>0.011 | KSS0.5-30A<br>KSS0.5-30B<br>KSS0.5-30C |
| M4 | | 1.38 | 0.11 | 0.14 | 0.011 | | 0.014 | KSS0.5-32A |
| M4 | | 1.55 | 0.13 | 0.16 | 0.013 | | 0.017 | KSS0.5-35A |
| M4 | | 1.61 | 0.14 | 0.16 | 0.014 | | 0.019 | KSS0.5-36A |
| M4<br>M4 | | 1.84 | 0.17 | 0.19 | 0.017 | | 0.024<br>0.023 | KSS0.5-40A<br>KSS0.5-40B |
| M4 | | 2.14 | 0.21 | 0.22 | 0.022 | | 0.030 | KSS0.5-45A |
| M4<br>M4 | | 2.43 | 0.27 | 0.25 | 0.027 | | 0.038<br>0.037 | KSS0.5-50A<br>KSS0.5-50B |
| M4 | | 2.67 | 0.32 | 0.27 | 0.032 | | 0.047 | KSS0.5-54A |
| M4<br>M5 | | 3.03 | 0.39 | 0.31 | 0.040 | | 0.058<br>0.055 | KSS0.5-60A<br>KSS0.5-60B |
| M4<br>M5 | | 3.63 | 0.55 | 0.37 | 0.056 | | 0.068<br>0.065 | KSS0.5-70A<br>KSS0.5-70B |
| M4<br>M5 | | 4.24 | 0.72 | 0.43 | 0.074 | | 0.079<br>0.077 | KSS0.5-80A<br>KSS0.5-80B |
| M5 | | 4.85 | 0.93 | 0.49 | 0.095 | | 0.090 | KSS0.5-90A |
| M5 | | 5.21 | 1.06 | 0.53 | 0.11 | | 0.099 | KSS0.5-96A |
| M5 | | 5.46 | 1.16 | 0.56 | 0.12 | | 0.10 | KSS0.5-100A |
| M5 | | 6.68 | 1.70 | 0.68 | 0.17 | | 0.14 | KSS0.5-120A |

[Caution on Secondary Operations]
① Please read "Cautions on Performing Secondary Operations" (Page 26) when performing modifications and/or secondary operations for safety concerns.
② Avoid performing secondary operations that narrow the tooth width, as it affects precision and strength.

## Application Hints

OPSEFSBDVF,),TEDH FBSTTBGFMMDBSFGMMBSFBEUFQJDBUPO)JOUCFGPSFQPDFFEJOH
GUFSFBSFRVTUPOTPSTFSRVSFDMBSJpDBUPOTQFBTFDPOEDVDUEDIOJDBMEFQSNFOUSTFOFBSFTEJTUSJCVS
5& (& 9 NBJMRDTQSEDHFBSTDPN

### 1. Cautions on Handling

,), QPEVDU BSF QDBHFE POF CZP OF QFWFOU
TDSBDIFTBOEEFOUCV GZPVOEJTTVTTV DIBTSVU
TDSBDIFPSEFOUXFOUF QPEVDUTSFNPWFE GSPN
UFCPBGBSQDIBTFQFBTFDPOEDUTQJFS
FQOEJOHPOUFIBOEMJOHNFUPEUFQPEDNBZF
DPNFEFQSNFEPSEBNBHFE3FJOHFBSTBOESJOHST
EFGPSNQSUDMBSMZBTJMZPQFBTFIBOEMFXUDBSF

### 2. Cautions on Performing Secondary Operations

*GSEHUT NUBUUBZTBMBUUEPMP
BUHUIDSSUBDP
5IFSSD BUSQHBSDUHTUIEFSSF
GBTFUIEF GBMBUHUID US*GUTUS
pMUUFSSTBMMETFUIBMUSBUTUTP
TDDIEBUISDSUITFSGBD
*GSHTHTSM MDSN UITFS
B SEFKBTGBN SDEPM BTS
DBUDUBTIUIEJZBMZHUP N
SFTSZTBSSHMMBTTSHBBUP

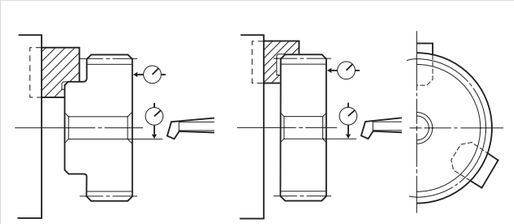

-BUF0QSBUPOT

5 NNFF TDBUZUIS BN
UIBUUIF TUSHUIBUIFC TUEHISUIBUIBUS
UIFHBSUF DI5IBN FFIMF
UPBUIFC BN5BUDISP DBN5
BUBZBZBMMBUP
*BSUBW TUSFTDSBUBDIZBZ
BST

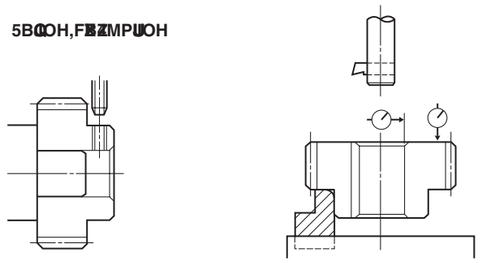

5BQOH,FBZMPUOH

5PBWFUSQPCMFNTPGSFEZHFBSQFDJTJPOBOE
PUFSNBOZBDBUJOHEJGGJDMUFTEBOQ
NBDIJOFUHFBSTTSFEDFGBDFXEU
8IFO JOEDUPOIBSEFOJOHQPEDUUFS NBM
TTFTTDSBDINBZBQBSMTPOPB UBUFQFDJ
TJPOHSBEFPGUFQPEDUEFDMJOFTCZPS HSBEFT
BTEFGPSNBUPPONBSJBMNBZDDSGZSFRVSF
BMFSBODFGPSCPSPUFSQSTUNBDIJOJOHJTOFDFT
TBSBGBSIFBUFBNFOU

## Induction Hardening

GZBQZOEDUPOIBSEFOJOHB UFHFBSBFUPG
4QPEDUZOFF EBEFTJHOBBUI BSEOFTT
BOEXFSFBQZFIFBBFB NFOBMPXTBO
FBNUFPGDPNNPOTBDJpDBUPOTBOE,),TTBDJp
DBUPOTGPSIBSEFOJOH

PNNPO4BDJpDBUPOTGPS)FBSSFBNUFOU
)B SEFOJOHMPDBUPOBS PUTSGBDF PS PU
TSGBDFBOEPPLSPPU
)BSEOFTTBJUJOUFSBOHFPG B )3BOE
)3XEU
BNUF B)3

,),T4BDJpDBUPOTGPS)FBSSFBNUFOU
)BSEOFOEMPDBUPOPUTSGBDF PS 5PBTS
GBDFBOE5PPLSPPU
)BSEOFTTB)3

)BSEOFTTBOEPQG(FBSBFUDEDUPO)BSEFOJOH
5IFIBSEFOJOHNFUPEBOEUFTBBPGUFIBSE
FOFE BFUBSFB WBSZEFQOEJOH PO UFTJ[FPG
HFBST
4JODFEJGGBSSFBFOJOHSFBNUFOTBQJFE
JOBDDSEBODFXUFNPEV MFBOEOMCFSPG
BFUFIBSEOFTTMFWFMZEFTJHOBBJT SFGFSSFE
BBTUFI BSEOFTTPGUFSFGBBDFEJBNFBSPS
TPNFPGPSQPEDUUFIBSEOFTTBBPUQ
SPPNBZPOFFRBMBUFIBSEOFTTZEFTJH
OBBE
TBUFFFDUWFDBTFEFGPS4JUTTBD
JGJREZ4BT5IFEJTU BODFGSPNUFTSGBBPG
UFDBTFB UF BSFBXUBSEOFTT)7 5IF
DBTFEFQEJFSTGSPNBSFBBBSFBPGBBPU

### 3. Points of Caution during Assembly

)TUBSHBSTB SFHFUPHW UIS
BDMBTI IBTTMFHUIDSTUBBW
KZUIGBM BMFBTU BDMBSBS
)BUIBDMBTIGBBSDMBTSS
UBTBBMF
BDMBTINZBKT UKZBHHUIF BST
UBBN BUHHBSTBN GBNUMBT B
TMUUIUB BMTBPHBS BDMBTIBHF
BTBSBUBBMSSSB

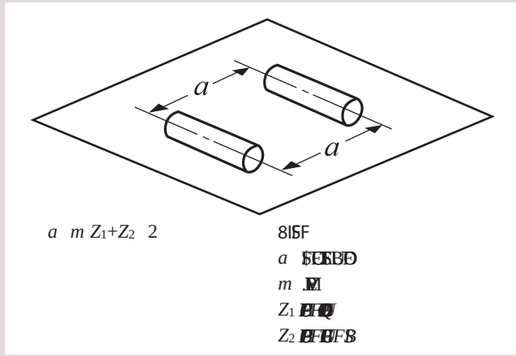


$a = m(Z_1+Z_2)/2$

8IFS
$a$ DFOUFS EJTUBODF
$m$ NPEVMF
$Z_1$ OVNCFS PG UFFUI PO TNBMMFS HFBS
$Z_2$ OVNCFS PG UFFUI PO MBSHFS HFBS

5IFUBCMFBMPBUFUIF UIFSBBUIFUB BM
MHUIGBTUBSSHBST1MBTTSSUBUITBUB
IFHHHBSTBBUISBT

**5PBM-FOHUSPMFSBODFGPS4BBOE)FMJDBM(FBST**

| Total Length (mm) | Tolerance |
|---|---|
| PSMFTT | μ |
| B | μ |
| 0WFS | μ |

[Note] 5IFGPMMPXOHSQPEDUBSFFDMZFEGSPNUBCMF4Q
QOJPOTIBGUOKFDUPONFNUQHFBSTMPDICTQ
HFBSTBOE.OZPSQPEDU

4SHBSTSD RJSTUGBD IBMTSF
UPGBTUFUIBSNZ UITUFIBGUT SBMMBSTUP
SZTIGUHUBSUITIBGU
ZBZTBSHSBMMZTF GBTUFHBSTUBTIBGU
BUIZTIMBSZBMZHSMMFMTGB

TUTSFB BMZHBUTUPUI FIBGUBTBS GBT
UFMZUITUTSF
5IBSS BMTNUFTF SFTUHTTH B.F
B-B104* -0,BB4BS HIBSBSUT
GBFBHHUIFMBUIBT
75GZUIBUUIETIBGUTBSBSBMMM*BSBSBTTNZ
MMMBUBZBUIDBDIDMBTTPF
BBSIDIBTTNZZ BUHBUIMBZB
GSMBSSBUIMDIFBSUEINH
UISMDIBSBSDBUHUIN

5TUBMBTBSB4EUP
BFHDBDMZUISBDBD



1BUBDBDBUUH

BSMBMEUR*4HBS
MBUHBZP
5IHD TBMB
UBBU SNL HN
8UFUIBMMBZF
E HTUSFHUIB UN
UIBMMBZF TSGBBBZUZ
UBR
5IFUU H BSFPUIF
BUBDBDBSBBGUB
BTBBBUP

### 4. Cautions on Starting

IFDUFGPMMPXOHJU FNTCFGPSFTBSUOH
w SFUFHFBSTJOTBMMFETDSFMZ
TUFSFOFWFOBPUDPOBDU
w TUFSFBEFRBCBDMBTI
FTSFDBWPJE[FSPCBDMBTI
w )BTQBSMCSJDBUPOCFFOTOUJFE
GHFBSTBSFFQTFE CFTSFBBDIB TBGFDPWFSB
FOTSFTBGFDTPCFDBSFGMOPBDDISPBUOHHFBST
( FBSTDBOCFMCSJDBUPONFU
PETOBTIMCSJDBUPONFUPEPJMCBUNFUPEPSGPSDFE
MCSJDBUPONFUPEDJSDMBUPOMCSJDBUPONFUPE
PSJOJUBMPESBUPOUFMCSJDBONBZEFBS JPSBBNBSL
FEMZPDIFDUFDPOEJUPOPGUFMCSJDBOBGBSTBSUOH
PSNP SFBDIOJDBMJOGRBNOUFBTFTFFUF TFDUPO(FBS
-CSJDBUPO1BHFPGPSBDIOJDBMSFGFSFODFCPPL
GUF SFJTBOZBCOPSNBDUBT OPJTFPSWCSBUPO
ESJOHTBSQIFDUFHFBSTBOEBTTFNCMZPOEJUPO
)JHIHFBSBDBSBDZNPPUHFBS BFUTSGBDFBOE
DPSSFDBPUDPOB DBSFTPNFPGUF NFBTSFTBHBJOTU
HFBSOPJTFPSNPSFBDIOJDBMJOGPSNBBUBTFTFF
UFTFDUPO(FBS/PJTFBOEPOBSNFBTSFT1B HF
PGPSBDIOJDBMSFGFSFODFCPPL

KHK considers safety a priority in the use of our products.
When handling, adding secondary operations, assembling, and operating KHK products, please be aware of the following issues in order to prevent accidents.

### Warning: Precautions for preventing physical and property damage

1. 8IFOTJOH,),QP EDUGPMMPXSFMFOUBGFBHHMBUPCT0DDBUPOBM4BGBOE)FBMJHFMB UPOTFD
2. 1BBOUPOBUFG PMMPXOHJBNTIFO JOTBMMJOHSFNPWBSGPSNJOHNBJOBODFBOEJOTBDPDPGUFQPEDU
   ① 5QOPUFBRS TXDI
   ② %OPS FBDIPSDSBMMDEFSUFQPEDU
   ③ 8FBSBQPQJBBDMPUJO HBOEQPEDUWFFRVJOFOGPSUFRSL

### Caution Cautions in Preventing Accidents

1. FGPSFTJOHB,),QP EDSFBEUFGFDB UPOTJOUFDBBMPHDBSFGMMZOPSBTFFJDPSSFDMZ
2. WPJEFTJOF OWJSPONFOUBNBZBEWFSTFMBFDUFQPEDU
3. 0QQ SPEDUBSFNBOGBDTFEDEFSBTBQSJP SRBMJZPOBPMTTBNCBTFEPOUF4 0RBMJZBOBHF NFOTZBNJGZV
   OPUDFBOZBMGOUPTOQQDIBTJOH BQPEDUFBTFDP OBDUFTQJFS